Linear motor module

- Semi-closed structure
- Max stroke: 5718mm
- Max speed: 5m/s
- Motor continuous thrust range:318N-636N
- Guide rail specs:20-2 pcs

• Module Ordering Rules

CFX20 - B 2 - L1114 - C - JN 3 - T - 01

Series	Slide length	Qty	Base length	Encode code	Sensor	Sensor qty	Guide rail	Custom
CFX	B:CFS095B(170mm)	2 *1	474-5978mm	C:incremental magnetic 1μm	JN: F&C NPN	Total sensor qty	T:THK	01
20: Base Width 200mm	C:CFS095C(235mm)	“None”	* Base Length L = 64 mm + n × 64 mm	J:absolute magnetic 1μm	JP: F&C PNP			Cust. S/N
	D:CFS095D(300mm)			S:incremental optical 1μm	ON: Omron NPN			
				C05:incremental magnetic 0.5μm	OP: Omron PNP			
				J05: absolute magnetic 0.5μm				
				S05:incremental optical 0.5μm				

• Basic Parameters

Item	Motor model	CFS095B	CFS095C	CFS095D
Slide length	mm	170	235	300
Continuous thrust	N	318	477	636
Peak thrust	N	747	1220	1494
Max load *1	500mm/s kg	65	95	125
	1000mm/s kg	35	50	65
Numbers of carriages		4	4	6
Moving*2 part mass	kg	5.5	7.5	9
Incremental Encoder *3	Magnetic	Resolution:1um Repeat accuracy±5um, Max speed:5m/s		
	Optical	Resolution:0.5um Repeat accuracy：±2um, Max speed:3m/s		
Ambient temp&humidity		0-40℃、20-80%RH (non-condensing)		
Encoder extension cable *4		E-FN09-26-Lxx-TC1/D-FN16-Lxx-T01	Standard cable length(m):Lxx:03、05、08、10、12	
Applicable driver *5		Pulse:AKS-0062AAPDB	Bus: AKS-0062AECDB	
Module wiring		Standard wiring：0.5 meters		

*1. Theoretical max load (horizontal, 1G accel, 0.5s E-stop, 1000mm stroke); actual load reduced by speed, acceleration, motor power, etc.

*2. Including motor, slide, worktable, encoder and other component weights;excluding cable weight.

*3. This data is measured by RENISHAW laser interferometer at 20°C ambient temperature, with a travel range of 1000mm;

*4. If extension cables are needed, please consult CF

*5 Driver model, please consult CF

• Motor Performance Parameters

CFS095B Slide 220V Thrust Diagram

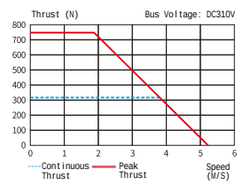

CFS095C Slide 220V Thrust Diagram

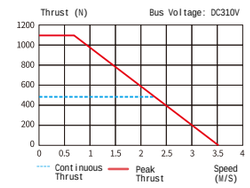

CFS095C Slide 220V Thrust Diagram

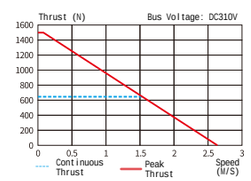

CFS095B Slide 380V Thrust Diagram

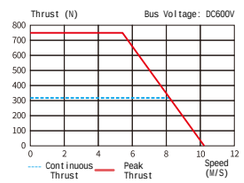

CFS095C Slide 380V Thrust Diagram

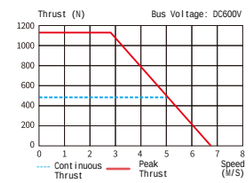

CFS095D Slide 380V Thrust Diagram

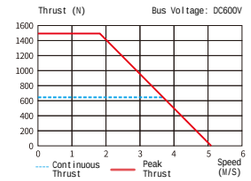

Specs / Motor Model	Continuous Thrust	Peak Thrust	Continuous Current	Peak Current	Thrust Constant ±10%	Back EMF Constant ±10%	Motor Constant ±10%	Resistance ±10%	Inductance ±30%	Electrical Time Constant	Rated Power	Maximum Power	Magnetic Pitch	Thermal Dissipation Coefficient	Magnetic Attraction Force	Mover Weight	Max Temperature
	N	N	A	A	N/A	V/m/s	N/√W	Ohm	mH	ms	W	W	mm	W/°C	KN	Kg	°C
CFS095B	318	747	5.1	15.3	67.8	59	23.5	8.36	30.95	3.7	324	4038	32	5.4	1.8	2.29	120
CFS095C	477	1120	5.1	15.3	101.7	88.4	28.8	12.77	47.26	3.7	486	6058	32	8.1	2.5	3.26	120
CFS095D	636	1494	5.1	15.3	135.6	117.9	33.3	17.76	65.72	3.7	648	8077	32	10.8	3.2	4.23	120

*1.Measurement ambient temperature 25°C, fixed on heat dissipation environment *2. Use 0.5m standard cable for voltage measurement.

*3. Inductance measured at 1 kHz.

*4. Unmarked dimensions tolerance ±0.1mm.

*5 Peak thrust duration: 1 s

*6. Related parameters are subject to change without notice

• CFS095B Dimension Parameters

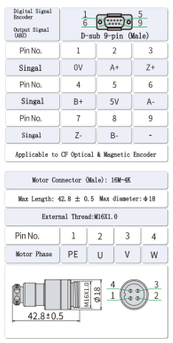

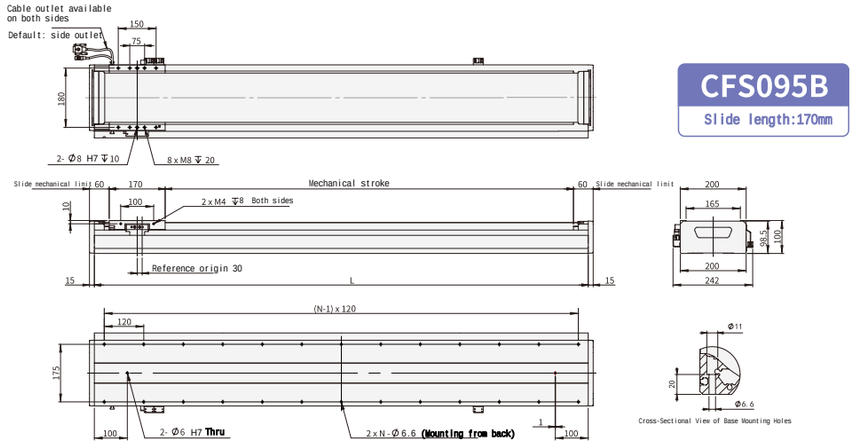

CFS095B

Slide length:170mm

Cross-Sectional View of Base Mounting Holes

Total Length (mm)	504	632	760	888	1016	1144	1272	1400	1528	1656	1784	1912	2040	2168	2296	2424	2552	2680	2808	2936	3064	3192
L Base Length (mm)	474	602	730	858	986	1114	1242	1370	1498	1626	1754	1882	2010	2138	2266	2394	2522	2650	2778	2906	3034	3162
Mechanical Stroke	214	342	470	598	726	854	982	1110	1238	1366	1494	1622	1750	1878	2006	2134	2262	2390	2518	2646	2774	2902
N	3	5	5	7	9	9	11	11	13	13	15	15	17	17	19	19	21	21	23	25	25	27
Total Weight (kg)	16.9	19.7	22.6	25.4	28.2	31.0	33.8	36.6	39.5	42.3	45.1	47.9	50.7	53.5	56.4	59.2	62.0	64.8	67.6	70.4	73.2	76.1

Total Length (mm)	3320	3448	3576	3704	3832	3960	4088	4216	4344	4472	4600	4728	4856	4984	5112	5240	5368	5496	5624	5752	5880	6008
L Base Length (mm)	3290	3418	3546	3674	3802	3930	4058	4186	4314	4442	4570	4698	4826	4954	5082	5210	5338	5466	5594	5722	5850	5978
Mechanical Stroke	3030	3158	3286	3414	3542	3670	3798	3926	4054	4182	4310	4438	4566	4694	4822	4950	5078	5206	5334	5462	5590	5718
N	27	29	29	31	31	33	33	35	35	37	37	39	39	41	43	43	45	45	47	47	49	49
Total Weight (kg)	78.9	81.7	84.5	87.3	90.1	93.0	95.8	98.6	101.4	104.2	107.0	109.9	112.7	115.5	118.3	121.1	123.9	126.8	129.6	132.4	135.2	138.0

• CFS095C Dimension Parameters

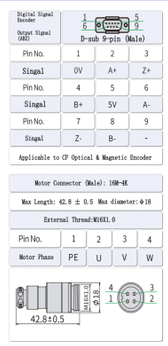

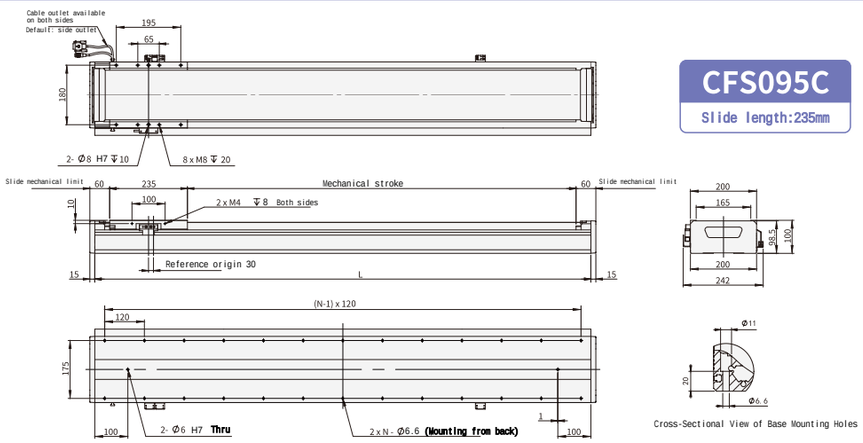

CFS095C

Slide length:235mm

Cross-Sectional View of Base Mounting Holes

Total Length (mm)	504	632	760	888	1016	1144	1272	1400	1528	1656	1784	1912	2040	2168	2296	2424	2552	2680	2808	2936	3064	3192
L Base Length (mm)	474	602	730	858	986	1114	1242	1370	1498	1626	1754	1882	2010	2138	2266	2394	2522	2650	2778	2906	3034	3162
Mechanical Stroke	149	277	405	533	661	789	917	1045	1173	1301	1429	1557	1685	1813	1941	2069	2197	2325	2453	2581	2709	2837
N	3	5	5	7	9	9	11	11	13	13	15	15	17	17	19	19	21	21	23	25	25	27
Total Weight (kg)	19.1	21.9	24.8	27.6	30.4	33.2	36.0	38.8	41.7	44.5	47.3	50.1	52.9	55.7	58.6	61.4	64.2	67.0	69.8	72.6	75.4	78.3

Total Length (mm)	3320	3448	3576	3704	3832	3960	4088	4216	4344	4472	4600	4728	4856	4984	5112	5240	5368	5496	5624	5752	5880	6008
L Base Length (mm)	3290	3418	3546	3674	3802	3930	4058	4186	4314	4442	4570	4698	4826	4954	5082	5210	5338	5466	5594	5722	5850	5978
Mechanical Stroke	2965	3093	3221	3349	3477	3605	3733	3861	3989	4117	4245	4373	4501	4629	4757	4885	5013	5141	5269	5397	5525	5653
N	27	29	29	31	31	33	33	35	35	37	37	39	39	41	43	43	45	45	47	47	49	49
Total Weight (kg)	81.1	83.9	86.7	89.5	92.3	95.2	98.0	100.8	103.6	106.4	109.2	112.1	114.9	117.7	120.5	123.3	126.1	129.0	131.8	134.6	137.4	140.2

• CFS095D Dimension Parameters

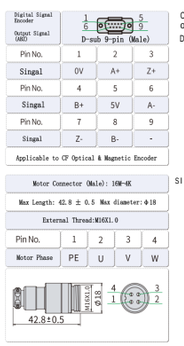

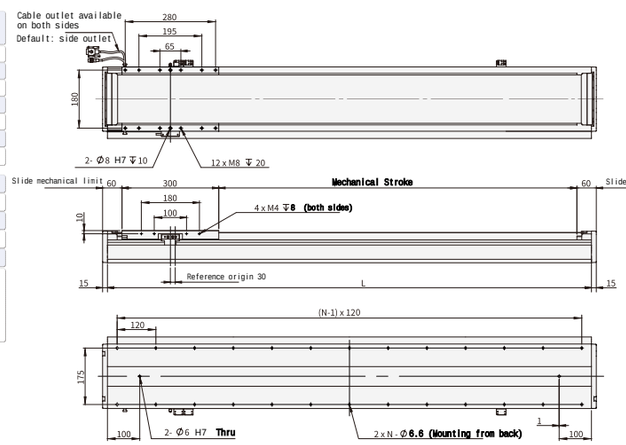

CFS095D

Slide length:300mm

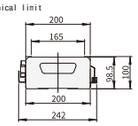

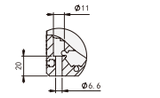

Cross-Sectional View of Base Mounting Holes

Total Length (mm)	504	632	760	888	1016	1144	1272	1400	1528	1656	1784	1912	2040	2168	2296	2424	2552	2680	2808	2936	3064	3192
L Base Length (mm)	474	602	730	858	986	1114	1242	1370	1498	1626	1754	1882	2010	2138	2266	2394	2522	2650	2778	2906	3034	3162
Mechanical Stroke	-	212	340	468	596	724	852	980	1108	1236	1364	1492	1620	1748	1876	2004	2132	2260	2388	2516	2644	2772
N	-	5	5	7	9	9	11	11	13	13	15	15	17	17	19	19	21	21	23	25	25	27
Total Weight (kg)	-	23.7	26.6	29.4	32.2	35.0	37.8	40.6	43.5	46.3	49.1	51.9	54.7	57.5	60.4	63.2	66.0	68.8	71.6	74.4	77.2	80.1

Total Length (mm)	3320	3448	3576	3704	3832	3960	4088	4216	4344	4472	4600	4728	4856	4984	5112	5240	5368	5496	5624	5752	5880	6008
L Base Length (mm)	3290	3418	3546	3674	3802	3930	4058	4186	4314	4442	4570	4698	4826	4954	5082	5210	5338	5466	5594	5722	5850	5978
Mechanical Stroke	2900	3028	3156	3284	3412	3540	3668	3796	3924	4052	4180	4308	4436	4564	4692	4820	4948	5076	5204	5332	5460	5588
N	27	29	29	31	31	33	33	35	35	37	37	39	39	41	43	43	45	45	47	47	49	49
Total Weight (kg)	82.9	85.7	88.5	91.3	94.1	97.0	99.8	102.6	105.4	108.2	111.0	113.9	116.7	119.5	122.3	125.1	127.9	130.8	133.6	136.4	139.2	142.0

MEMO